MINI-KORG SYNTHESIZER

SERVICE MANUAL

Unicord.
a Division of Gulf + Western Manufacturing Company
89 Frost Street, Westbury, N.Y. 11590

MINI-KORG SYNTHESIZER OPERATING PROCEDURE

1. Connect AC line cord (found inside recessed compartment on rear of unit, figure 1) to local voltage 50/60Hz outlet.
2. Connect audio cable (shielded-type) from jack marked "Output", to input of your amplifier. Utilize jack marked "H" for high impedance use (100K Ω) or jack marked "Low" for low impedance (5K Ω) shown in figure 1.

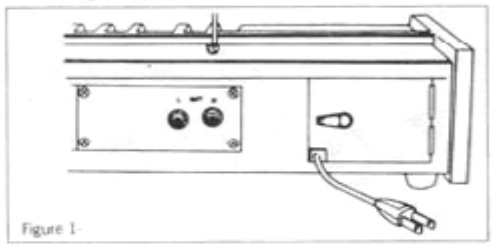

Figure 1

3. Switch on/off control to "On" position. If pilot lamp fails to light, check fuse found in rear compartment. figure 1 and replace *With identical rating only.*
4. Install enclosed Music Rack as shown in figure 2.

Figure 2

5. Adjust pitch-control slide for tuning figure 10.
   To adjust Pitch, set Attack-Percussion slides (figure 5) to "8", and all "Instant Set Tabs" (figure 8) to OFF position.
6. Follow the control descriptions listed next for a better understanding of the versatility of your new MINI-KORG SYNTHESIZER.
7. Unit is equipped with 2 rear adjustable legs for tilting.

Precautions:

- Be certain that power switch is turned OFF whenever plugging in or unplugging the AC connector cord.
- If fuse should need replacing, make sure that you replace with *identical* value.
- Protect the unit from excessive heat, humidity, and vibrations.

CONTROL DESCRIPTION:

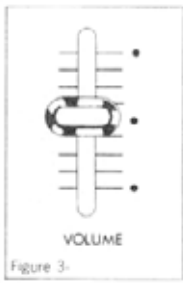

Figure 3-

VOLUME–For adjusting overall volume level.

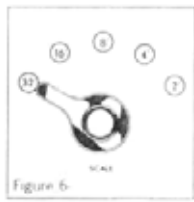

Figure 6-

SCALE–This rotary control provides the selection of a full five (5) octave range, 32'; 16'; 8'; 4'; 2'; which extends the 37-note keyboard to a "FULL Spectrum Keyboard"

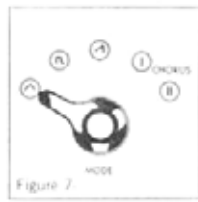

Figure 7.

MODE:
TRIANGLE–Renders a soft tonal response–sax, clarinet, bass guitar, etc.
SQUARE–Provides a single reed gravitation bells, flutes, clarinets, malleted bar action, etc.
SAW-TOOH–Develops your double-reed, strings, brass and many modern tones. This waveform is one of the most used in synthesizer interperetations.

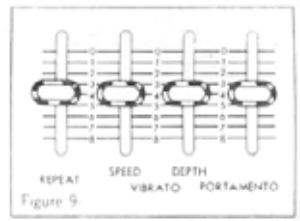

Figure 9-

SLIDE MODIFIER GROUP
REPEAT–This provides speed adjustment of the repeat "Instant Set" Control. (Figure 8, #5)
VIBRATO SPEED/DEPTH–These slides give full control over the Vibrato Speed and depth when the Vibrato or Delay Vibrato "Instant Set" tab is utilized. (Figure 8,5 #6 and #7)
PORTAMENTO–This slide allows you to adjust your glide rate.

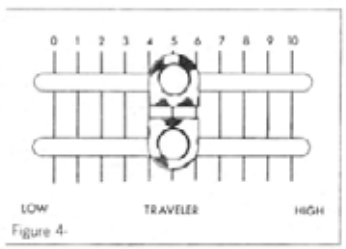

Figure 4-

TRAVELER–By the proper utilization of these controls, the operator can alter any musical character in reference to timbre, brillance, tone, etc.

CHORUS/PHASER–
I Slow rotating sound with duplicating effect.
II Fast rotating sound with intensified duplication effect.

Figure 8.

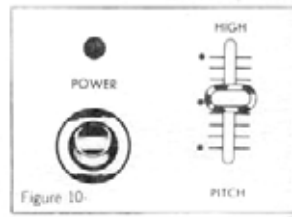

Figure 10-

CONVENIENCE GROUPS–
I indicator lamp.
II Pitch–Allows user to pre-set his overall tuning.

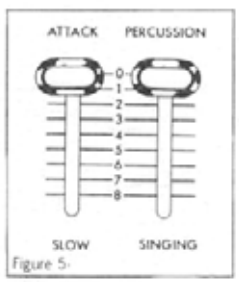

Figure 5-

ATTACK–This slide control will form the beginning of your musical voice, from a fast attack to a slow attack.
PERCUSSION–This slide control will adjust the end of each note, when the key is held down.

"INSTANT SET" GROUP:
1. EXPAND–This control is a sub-division of the traveler circuit. It provides "capturing" effect when used in conjunction with traveler (figure4) and Attack/Percussion group (figure5). Creates brass, under-water effect, bubbling effect, growl, etc.
2. BRIGHT–Provides additional high-frequency harmonic structure, or added brilliance and presence.
3. SUSTAIN–Couples a fixed sustain to the existing tone, when key is released.
4. BENDER–Provides added slide to the beginning of each tone; such as Glissando, slur and other accenting generations used in synthesized music.
5. REPEAT–This effect is used for creating simulations of flutter, trill, mandolin, triple picking, etc.
6. VIBRATO–Provides constant pitch change Vibratotto to tone. change Vibrato to your
7. DELAY VIBRATO–Adds a colorful realism to your playing by applying vibrato with a slight delay for additional expression.
8. PORTAMENTO/GLIDE–Allows you to glide from last note played to the next note, in any given sequence. This control allows you to create such effects as; bowing strings, theremin, theremin, sonic wave, scanning etc.

MINI-KORG SYNTHESIZER PREPARED INSTANT-SET CHART

It is often better to change the lever position slightly according to the type of amplifier used.

Reed 1	2 4	4-8	16'/8'	⊓						•			4	4	
Brass	1 3	4-8	All	⟋	•					•			4	4	
Reed 2	2 7	4-8	16'	∧						•			4	4	
Banjo	0 10	0-0	8'	⟋		•		•				6			
Bells	0 10	0-0	2	⊓		•	•								
Double Reed	0 10	4-8	16'/8'	⟋		•				•			4	4	
String	10 8	8-6	2'	⟋		•				•	•		4	4	2
Finger Bass	0 0	0-2	32'	∧			•								
Accordion	5 5	6-8	16'/8'	Chorus II					•				4	4	
Fife/Picollo	10 0	6-8	2'	∧						•			4	4	
"Tank"	0 0	1-8	32'	⊓	•	•	•								
"Walkin"	0 6	0-8	32'	Chorus I	•	•		•							
"Sing"	0 10	0-6	8'	⊓	•	•		•		•					
"Pipe"	0 10	4-8	16'/8'/4	Chorus II		•									
"Water" Mute	0 8	5-8	All	⟋	•	•				•			4	4	
Sonic Scan	10 0	0-0	All	All				•			•	8	0	0	8
Bass Walk	0 0	0-2	32'/16'	∧		•	•								
Slide Bass	0 3	4-8	All	⟋	•					•	•		4	4	4
"Crimson" Bass	10 0	8-8	32'/16'	Chorus I	•	•	•								
"Bubble" Strings	10 0	8-8	4'/2'	Chorus I	•	•	•		•	•			4	8	8

SPECIFICATIONS

● **Key board**	Scale 37 keys 3 Octaves
● **Scale**	32' 16' 8' 4' 2' 7 Octaves
● **Wave form**	Triangular Wave Square Wave Sawtooth Wave Chorus I Chorus II
● **Effect Switch**	Expand, Bright, Sustain, Bender, Repeat Vibrato, Delay Vibrato, Portamento
● **Slide Control**	Volume, Traveler, Attack-Slow, Percussion-Singing Repeat, Vibrato-Speed, Vibrato-Depth Portamento Pitch
● **Dimensions**	Length: 29.3in. Width: 11.0in. Height: 4.3in.
● **Weight**	19.8lbs.
● **Accessories**	Music Rack, Connection Cord
● **Power Supply**	117V 50/60Hz
● **Power Consumption**	15W
● **Others**	Power Switch, Pilot Lamp, Output Jack (High 100KΩ Low 5KΩ)
● **Options**	Case, Stand, Expression Pedal (2 channels)

BLOCK DIAGRAM

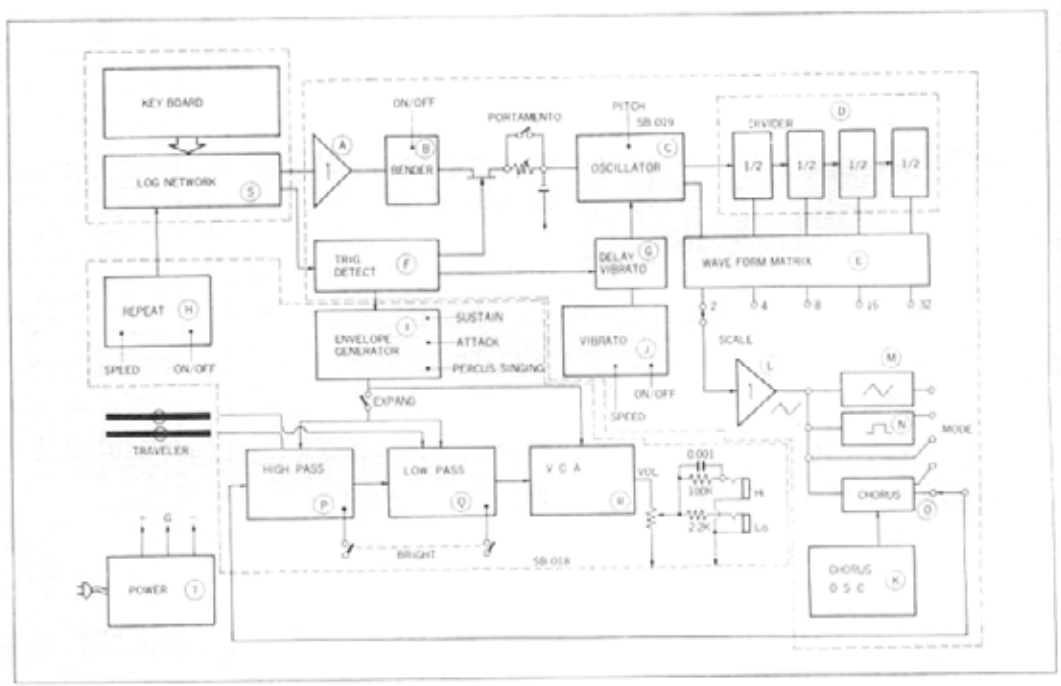

PARTS DISTRIBUTION

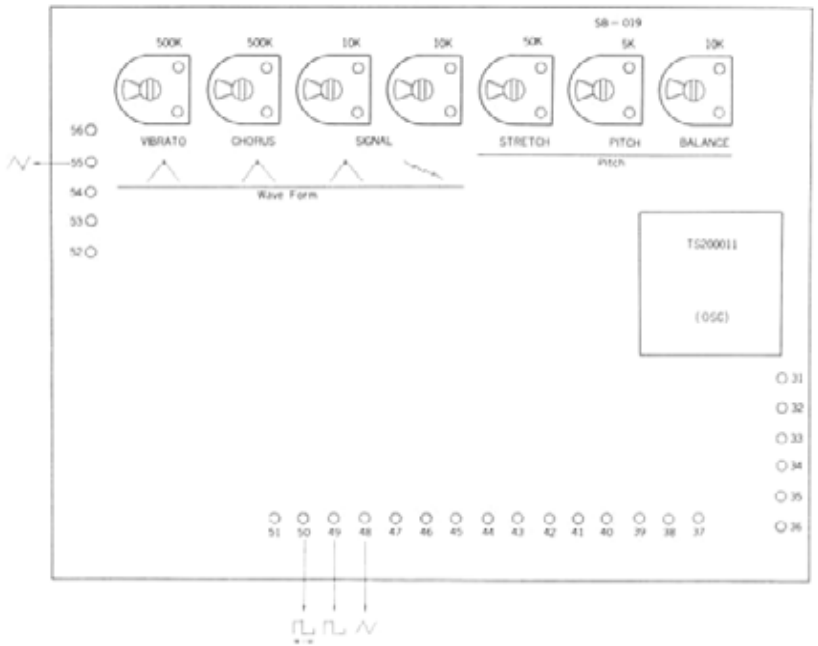

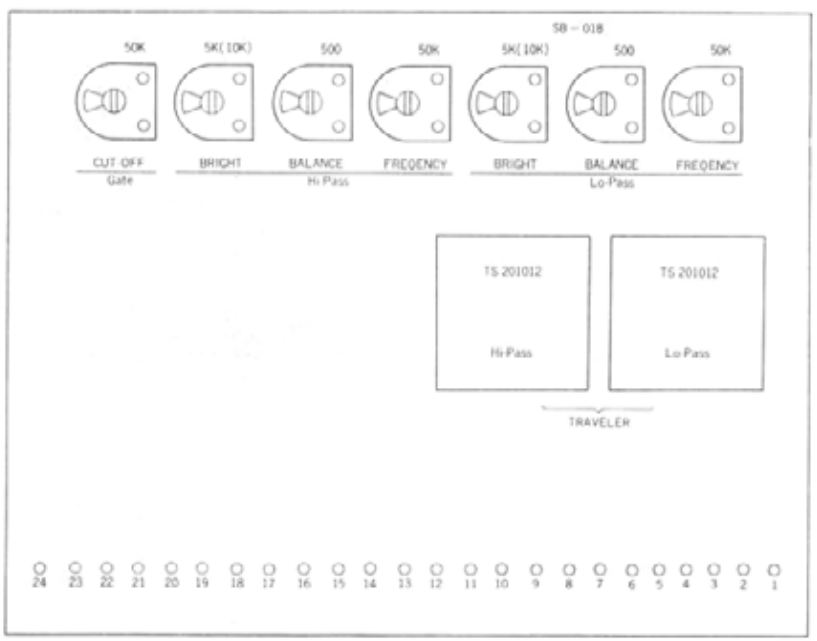

MECHANICAL PARTS DIAGRAM

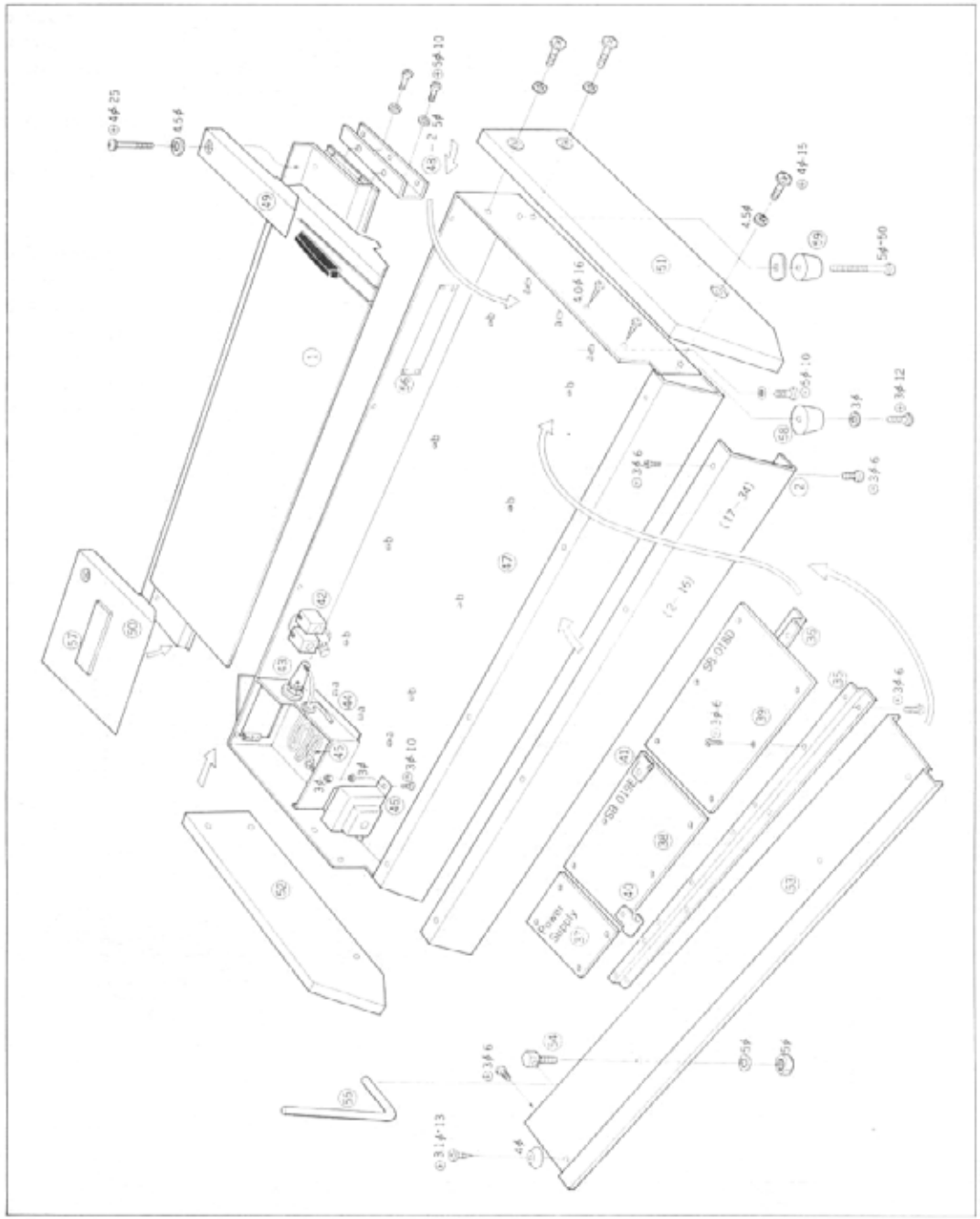

MINI KORG 700S ADJUSTMENT PROCEDURE

COARDINAL ADJUSTMENT

1. VOLTAGE ADJUSTMENT
   SETTING: Power Source Line: Oscilloscope
   a. DC - VEE - 10V Green Line
      + VCC + 20V Orange Line

   b. Ripple Check
      Make the value of oscilloscope lower than 10mV, setting at AC range.

MAIN PART

2. PITCH ADJUSTMENT
   SETTING: PITCH KNOB: CENTER
   SCALE: 8'
   MODE: ⊓
   OUT: WT-10A

KEYBOARD

C1		C2		C3		C4

   a. Press C4 and adjust with (SB-019) 5KVR to make the pitch 0 cent.
   b. Press C2 and adjust with (SB-019) 50KVR to make the pitch 0 cent.
   c. Press C1 and adjust with (SB-019) 10KVR to make the pitch 0 cent.
   d. Repeat a, b, c operations to make all pitch 0 cent.

3. TRAVELLER ADJUST
   SETTING: SCALE: 32'
   MODE: ⋀
   BRIGHT: ON
   OCT: OSCILLO
   a. LOW PASS Q ADJUSTMENT
      Set Traveller H:MAX, L:MAX and the range of oscilloscope 0.1 usec, then adjust with 50KVR Frequency to make one wave cycle 1 cm.

   b. HIGH PASS Q ADJUSTMENT
      Set Traveller H:6, L:6 and adjust with (SB-018) 50KHigh Pass Frequency to make the area of wave cycle largest.

c. LOW PASS CUT OFF ADJUSTMENT
Traveller H:6, L:0. Adjust with 5K Low Pass Bright to make 5 wave cycles.

d. HIGH PASS CUT OFF ADJUSTMENT
Traveller H:MAX L:6. Connect the oscilloscope with SB-018 HP Check, and adjust at range 0.1V 5m Sec with 5K High Pass Bright to make 4 wave cycles.

4. VCA GATE ADJUSTMENT
SETTING SCALE: 2'
SUSTAIN: ON
ATTACK: 0
SINGING: 10
Press the key and adjust with 50K Gate Cut Off to avoid the sound to remain.

*Refer to the Parts Distribution in the service manual, regarding all the Adjustment VR.

EFFECT PART

1. PITCH ADJUSTMENT
SETTING: EFFECT: ON
BALANCE: 0
PITCH: 4
SELECT: DUET
OUT: WT-10A
a. Press C4 and adjust with 50K Hi Pitch to make the pitch 0 cent.
b. Press C1 and adjust with 10K Lo Pitch to make the pitch 0 cent.
c. Repeat the a and b operations several times.

2. RING MODULATION ADJUSTMENT

SELECTOR: MODULATOR 3
Adjust with 10K Ring Balance to make every pitch out of tune.

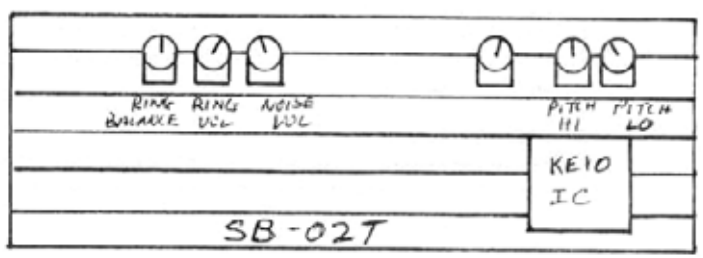

MINI KORG 700S (K-2) PARTS LIST

Parts NO.	Description	Parts NO.	Description
Fixed Carbonfilm Resistors ¼W 5%		Disctype Ceramic Capacitors	
120-02101	100Ω	135-16470	47PF
-02102	1KΩ	Tantalum Electrolytic Capacitors	
-02392	3.9KΩ	143-16471	16V M .47μF
-02472	4.7KΩ	-16332	16V K 3.3μF
-02822	8.2KΩ	-16103	16V M 10μF
-02103	10KΩ	Aluminum Electrolytic Capacitors	
-02153	15KΩ	140-50101	A50V 1MF
-02223	22KΩ	-25102	A25V 10MF
-02333	33KΩ	Transistors	
-02473	47KΩ	110-05003	2SA564S
-02683	68KΩ	-05001	2SC828S
-02823	82KΩ	-05002	2SC644S
-02104	100KΩ	FET	
-02224	220KΩ	110-04001	2SK-30Y(0)
-02474	470KΩ	Silicon Diode	
-02105	1MΩ	170-1004	1S-1555
Fixed Resistors ¼W 5%		IC	
123-02225	2.2MΩ	112-01001	TS-200011
-02106	10MΩ	Printed Circuit Boards	
Semifixed Resistors		181-01004	SB-027
160-05502	B- 5KΩ	Variable Resistors	
160-05103	B- 10KΩ	251-02103	30mm B 10KΩ
05503	B- 50KΩ	251-02104	30mm B100KΩ
-05504	B-500KΩ	Paddle Switches	
Polyester Film Capacitors 50V		221-01004	SP-2012
130-01102	.001μF	221-01005	SP-2022
130-01103	.01μF	Rotary Switches	
-01473	.047μF	223-01246	ESR-246 K20Z
Polystyrene Film Capacitors		Lugboard	
137-01202	2000PF	233-01104	1L4P
137-01802	8000PF		

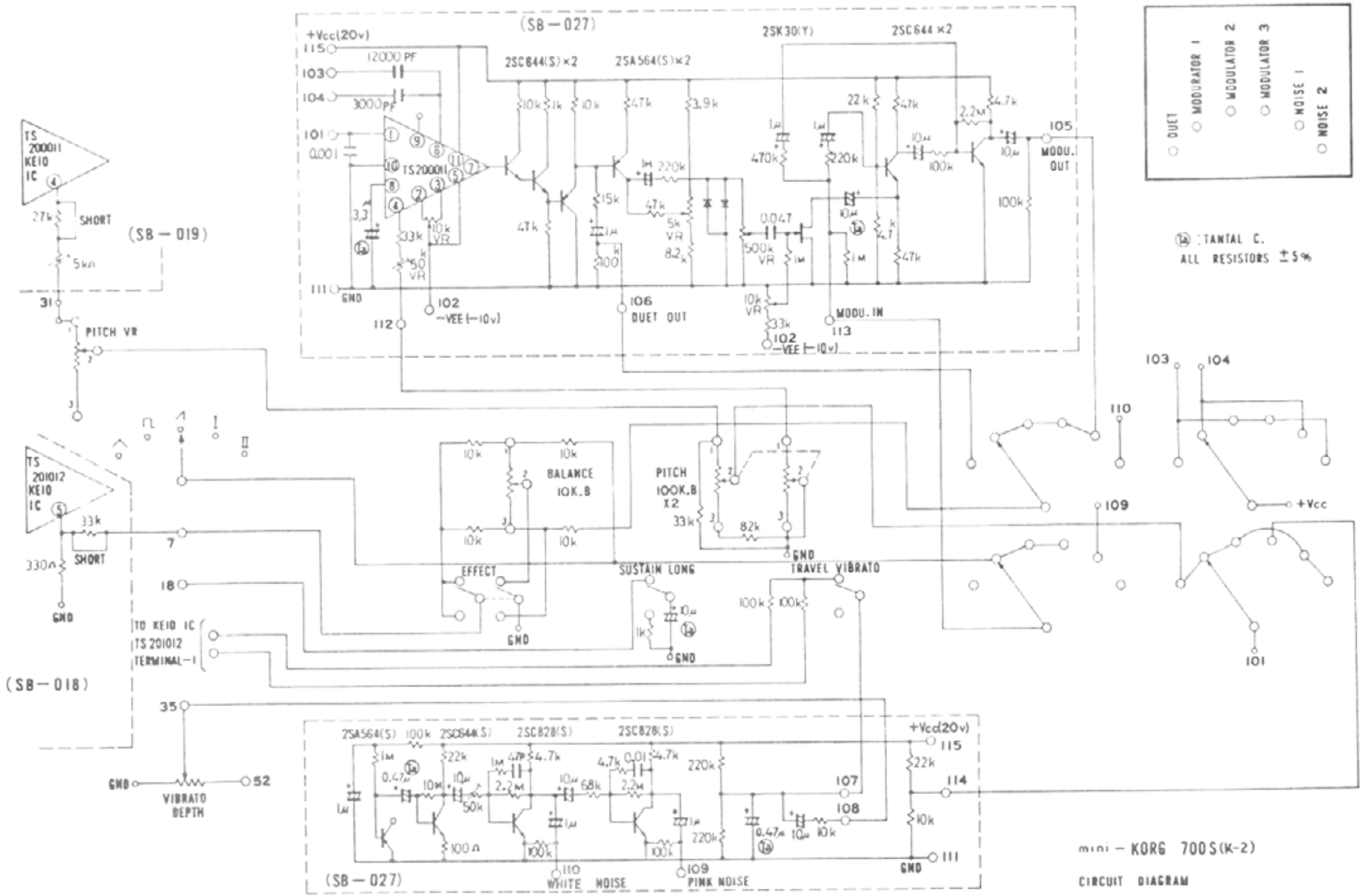

mini-KORG 700S(K-2)

CIRCUIT DIAGRAM

MECHANICAL PARTS LIST

Key NO.	Parts NO.	Description	Key NO.	Parts NO.	Description
1	212-01001	Key Board(17~25)	36	241-01003	Circuit Board Bar
2	321-01001	Front Panel	37	181-01003	Power Supply Board
3	331-05002	Volume Knob	38	181-01002	SB-019 Printed Circuit Board
4	331-05003	Traveler Knob	39	181-01001	SB-018 Printed Circuit Board
5	331-05004	Attack Knob	40	412-04002	Cord Clamp L
6	332-01001	Scale Knob	41	412-04001	Cord Clamp S
7	332-01002	Mode Knob	42	240-01001	Headphone Jack
8	331-05005	Expand, Bright Knob	43	230-01002	Fuse Holder
9	331-05006	Sustain Knob	44	412-02001	Strain Relief Bushing
10	331-05007	Bender Knob	45	410-01001	Power Supply Cords
11	331-05008	Repeat Knob	46	190-03001	Power Transformer
12	331-05009	Portamento Knob	47	241-01001	Frame
13	331-05010	Vibrato Speed Knob	48	241-01004	Key Board Rack
14	331-05010	Portamento Knob	49	311-01001	End Cover Panel (R)
15	370-01001	Lamp Holder	50	311-01002	End Cover Panel (L)
16	221-01002	Power Switch	51	311-01003	Side Board(R)
26	251-01502	Slide VR 5KA (30mm)	52	311-01004	Side Board(L)
27	251-02502	Slide VR 5KB (30mm)	53	241-01005	Top Board
28	251-01103	Slide VR 10KA (30mm)	54	351-01001	Music Rack Screw
29	251-02103	Slide VR 10KB (30mm)	55	351-01002	Music Rack
30	251-01504	Slide VR 500KA (30mm)	56	321-01002	Name Plate
31	252-02103	Slide VR 10KB (60mm)	57	321-01003	Mark MINI KORG
32	223-01245	Rotary Switches 2, 4, 5	58	380-01001	Rubber Foot (Front)
33	224-01001	Lever Switches 18LS	59	380-01002	Rubber Foot (Rear)
34	370-01001	Pilot Lamp	60	232-01001	Pin Housing
35	241-01002	Circuit Board Bar	61	232-01002	Socket Housing

SB-018 PARTS LIST

Key NO.	Parts NO.	Description	Key NO.	Parts NO.	Description
	Fixed Carbonfilm Resistors ¼ W 5%			Polyester Film Capacitors 10%	
	120-02100	Rh 10Ω		130-01102	50V .001μF
	-02101	100Ω		01222	.0022
	02221	220Ω		01103	.01
	331	330Ω		01473	.047
	102	1KΩ		Tantalum Electrolytic Capacitors	
	122	1.2KΩ		142-35470	20% 35V-.47μ
	222	2.2K		142-16102	20% 16V-10μ
	332	3.3KΩ		143-35101	10% 35V-1μ
	392	3.9KΩ		143-25331	10% 25V-3.3μ
	472	4.7KΩ		Aluminum Electrolytic Capacitors	
	562	5.6KΩ		140-25331	A 25V-3.3μ
	103	10KΩ		-25102	25V-10μ
	153	15KΩ		-16332	16V-33μ
	223	22KΩ		-16103	16V-100μ
	333	33KΩ		-25103	25V-100μ
	473	47KΩ		-25223	25V-220μ
	104	100KΩ		Transistors	
	224	220KΩ		110-05003	2SA56A (S-T)
	334	330KΩ		-05002	2SC64A (S-T)
	474	470KΩ		-05001	2SC828 (S-T)
	105	1MΩ		IC	
	2%			112-01002	TS201012
	120-03472	4.7KΩ		FET	
	Fixed Resistors			110-04001	2SK-30Y
	123-02225	5% 2.2MΩ		Diodes	
	Semifixed Resistors			170-01004	IS1555
	160-05501	500Ω		170-01004	IS1555 (4P)
	-05502	5KΩ		-01005	IN-60
	-05503	50KΩ		Zener Diodes	
	Disc Type Ceramic Capacitors			170-03001	02Z 5.6A
	135-01101	50V 100PF		170-03002	02Z 9.1A

SB-019 PARTS LIST

Key NO.	Parts NO.	Description		Key NO.	Parts NO.	Description	
					·01223		.022
	Fixed Carbonfilm Resistors ¼W 5%				·01473		.047
	120·02100		10Ω		·01823		.082
	120·02101		100Ω		·01334		.33
	·02221		150Ω		Tantalum Electrolytic Capacitors		
	471		470Ω		143·25332	10%	25V–3.3μ
	681		680Ω		142·16102	20%	16V–10μ
	102		1KΩ		Aluminum Electrolytic Capacitors		
	222		2.2KΩ		140·50101	A	50V–1μ
	272		2.7KΩ		140·25102		25V–10μ
	332		3.3KΩ		·16332		16V–33μ
	392		3.9KΩ		·16103		16V–100μ
	472		4.7KΩ		Polestilene Capacitors		
	562		5.6KΩ		137·01122	± 5%	12000P
	682		6.8KΩ		Fixed Carbonfilm Resistors ¼W2%		
	103		10KΩ		120·03103		10K
	153		15KΩ		·03153		15KΩ
	183		18KΩ		·03303		30KΩ
	223		22KΩ		·03603		60KΩ
	273		27KΩ		·03124		120KΩ
	333		33KΩ		·03244		240KΩ
	393		39KΩ		Metalfilm Resistors		
	473		47KΩ		122·03392	1/8W ± 1%	3.9KΩ
	563		56KΩ		122·03472		4.7KΩ
	104		100KΩ		·03623		62KΩ
	224		220KΩ		Transistors		
	474		470KΩ		110·05003		2SA·564 (S–T)
	105		1MΩ		110·05002		2SC·644 (S–T)
	Fixed resistors				110·05001		2SC·828 (S–T)
	123·02225	5%	2.2M		FET		
	·02106		10MΩ		110·04001		2SK·30Y
	Semifixed Resistors				111·05002		IC 741
	160·05502		5KΩ		·05001		MN 131
	·05103		10KΩ		112·01001		TS 200011
	·05503		50KΩ		Diode		
	·05504		500KΩ		170·1004		IS 1555
	Disc Type Ceramic Capacitors				Key Board parts		
	135·01101	50V	100P		Metalfilm Resistors 1/8W 1%		
	Polyester film Capacitors 10%				122·03401		400Ω
	130·01102	50V	.001μF		·03431		430Ω
	·01472		.0047μF		·03682		6.8KΩ
	·01123		.012		·03623		62KΩ

SB-018, SB-019 CIRCUIT BOARD

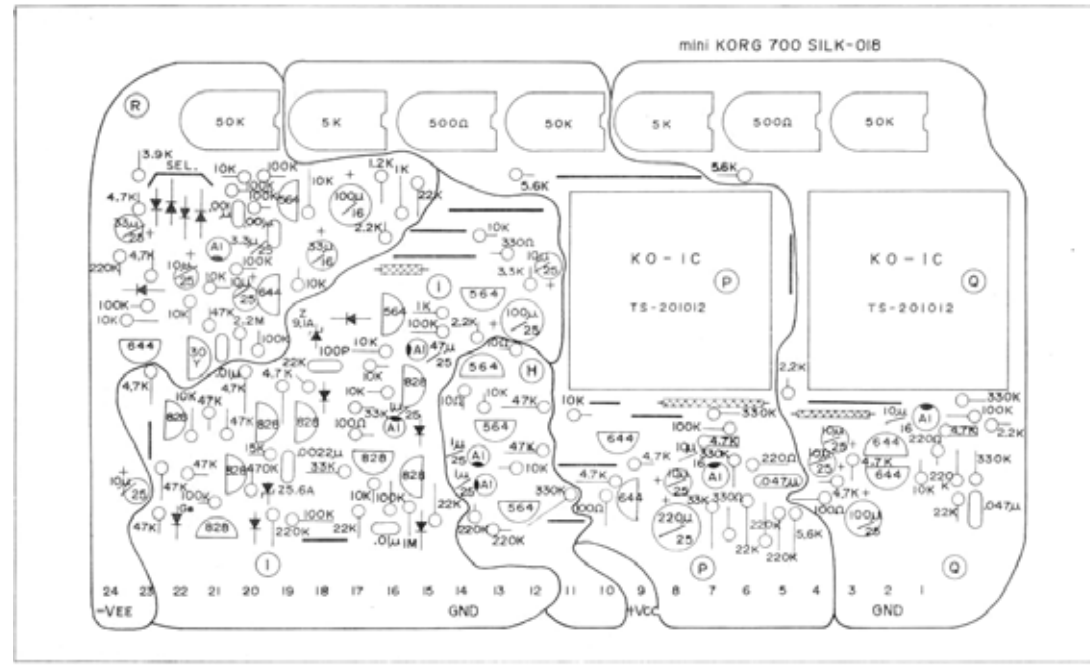

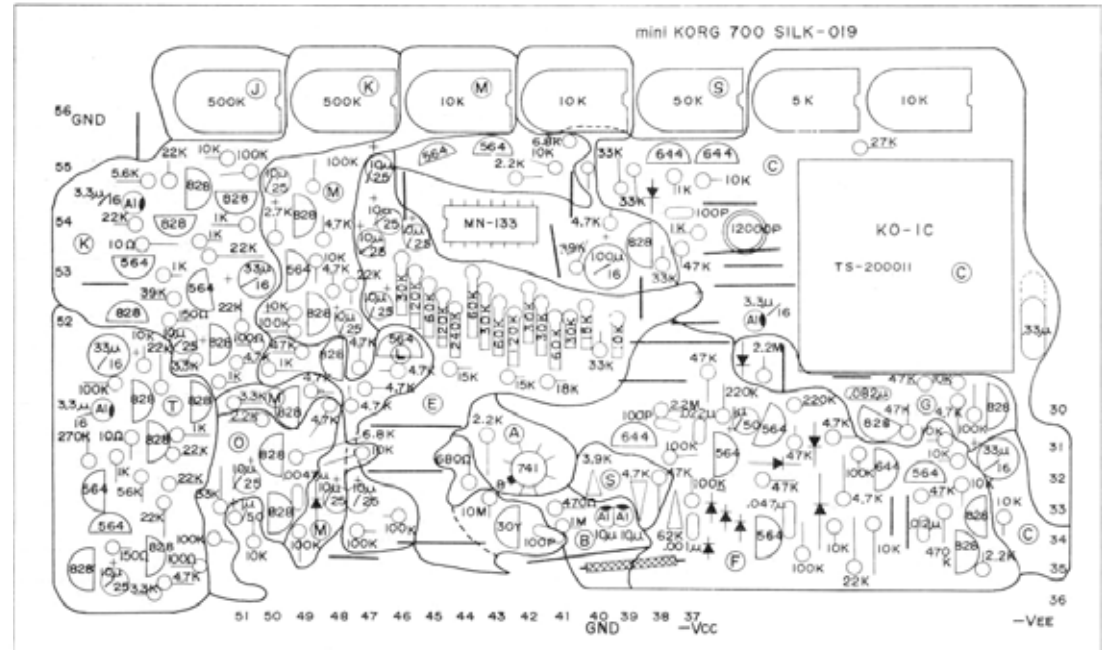

SB-020 CIRCUIT BOARD

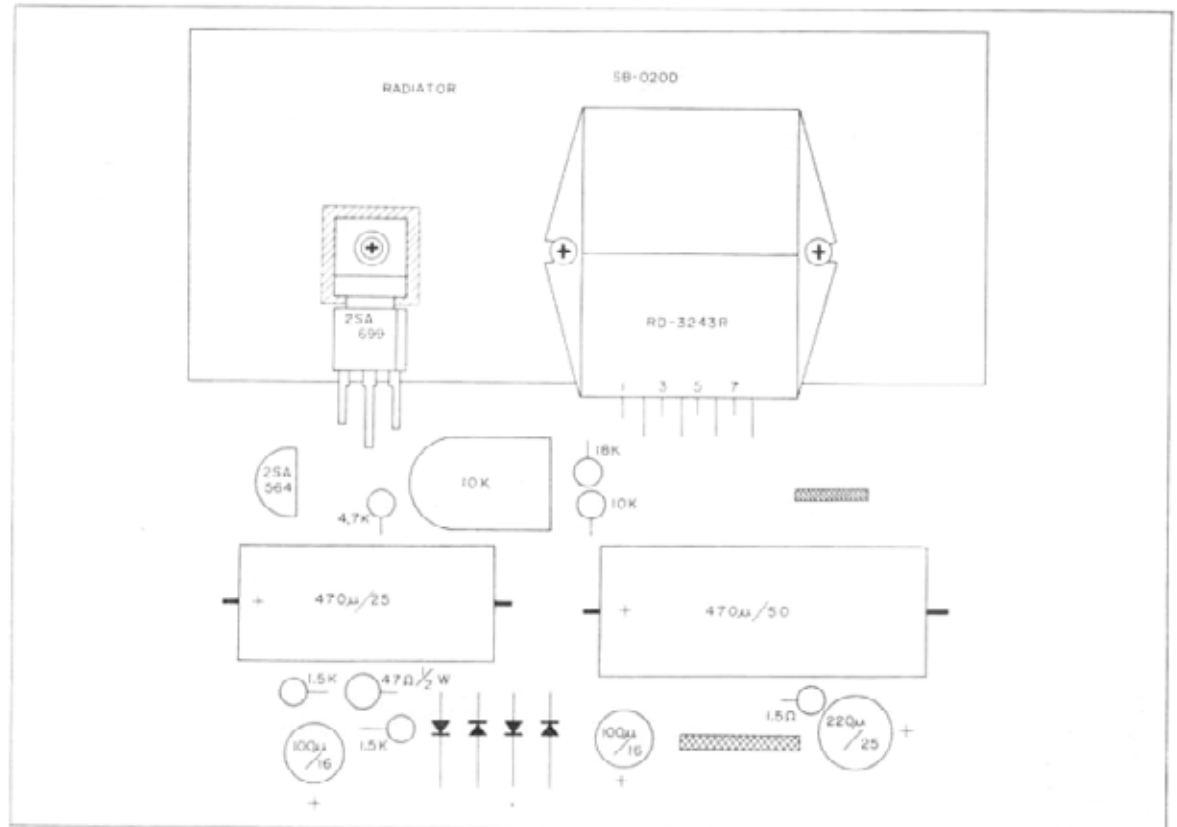

NOTE

A	IC
B	BENDER
C	OSCILLATOR
D	DIVIDER
E	WAVE FORM MATRIX
F	TRIG. DETECT
G	DILAY VIBRATO
J	VIBRATO
L	MODE
M	MODE
N	MODE
O	CHORUS
K	CHORUS OSC
H	REPEAT
I	ENVELOPE GENERATOR
P	HIGH PASS
Q	LOW PASS
R	VCA

OVERALL WIRING DIAGRAM

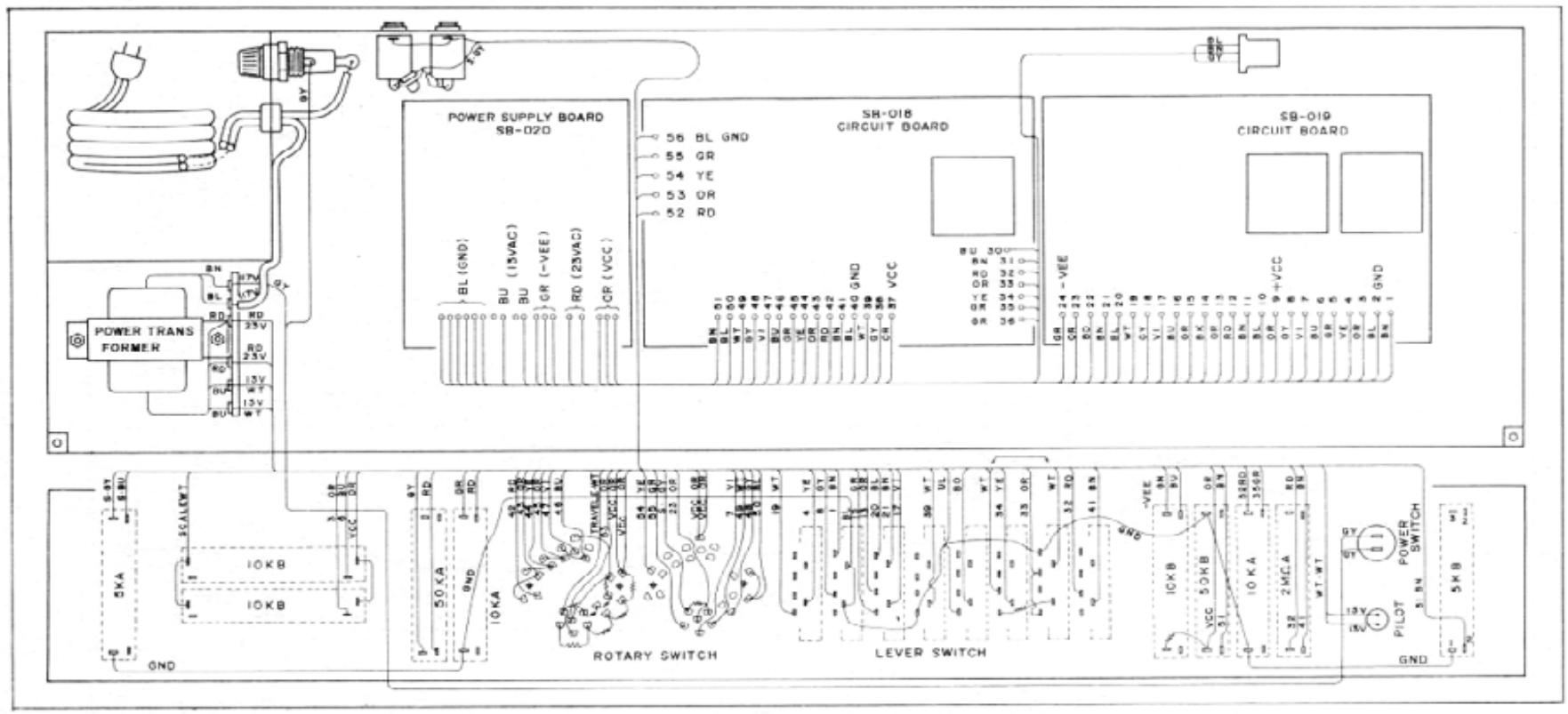

NOTE
BN– BROWN
RD– RED
OR– ORANGE
YE– YELLOW
GR– GREEN
BU– BLUE
VI– VIOLET
GY– GRAY
WT– WHITE
BL– BLACK

PARTS DISTRIBUTION

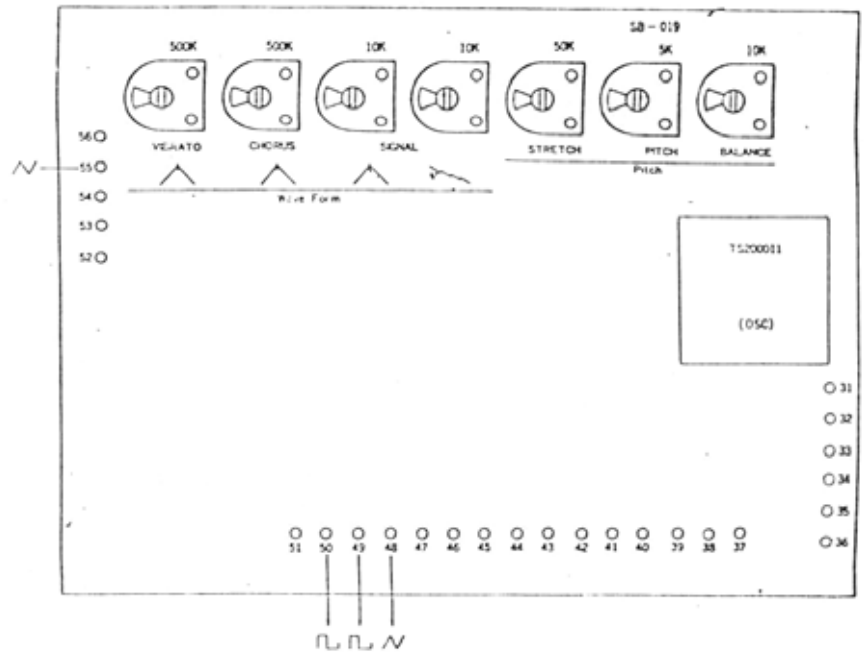

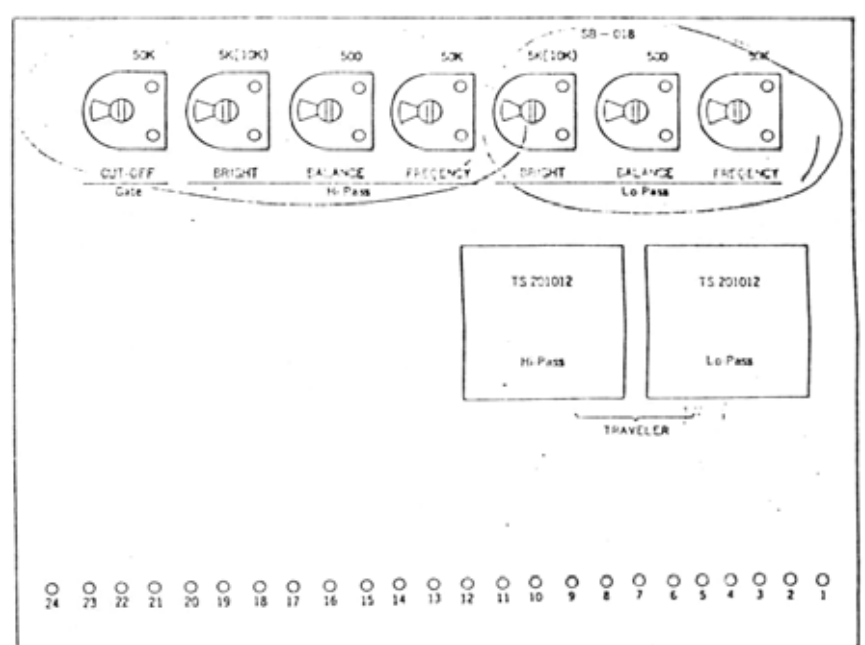

OVER-ALL CIRCUIT DIAGRAM

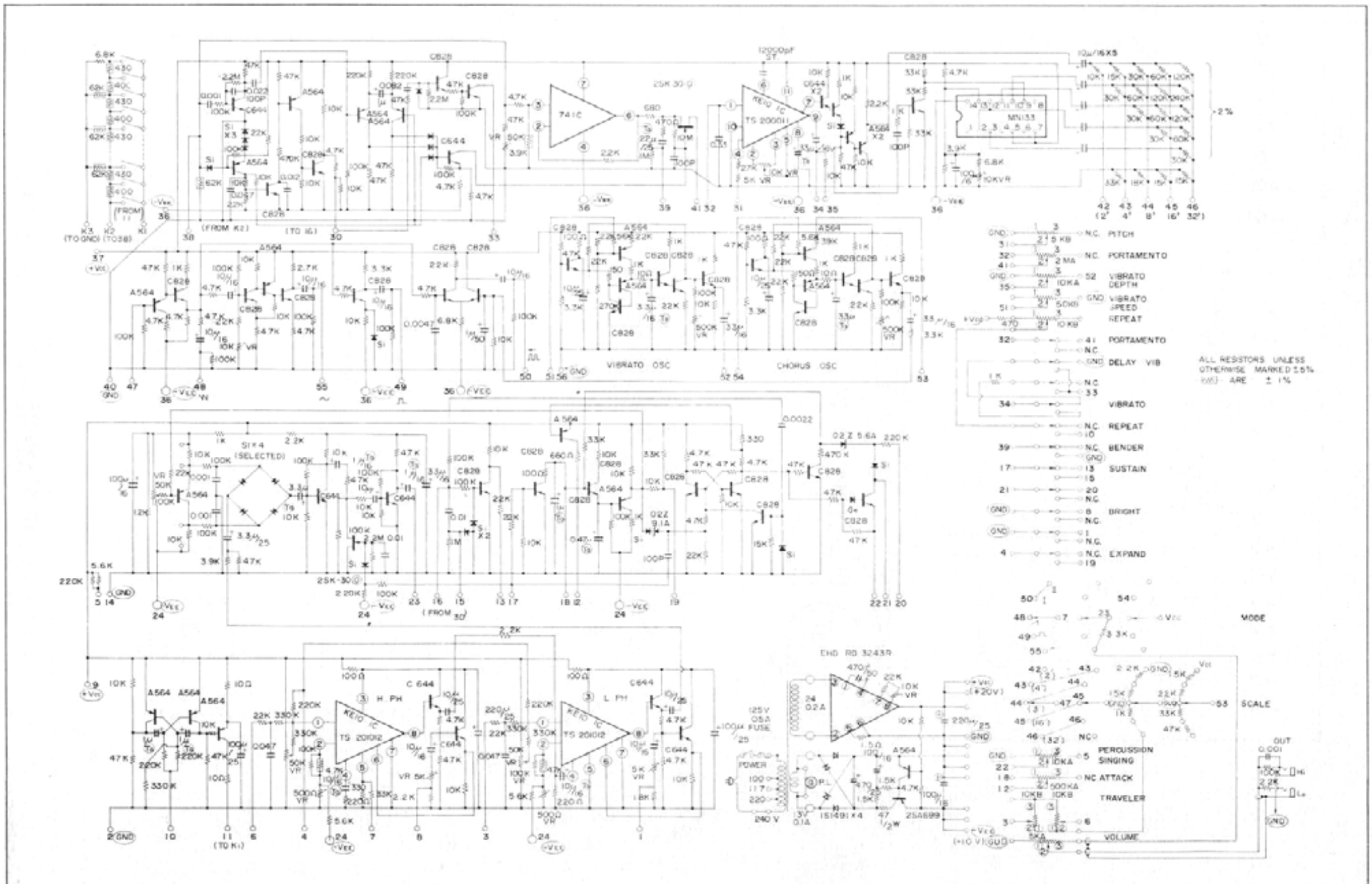

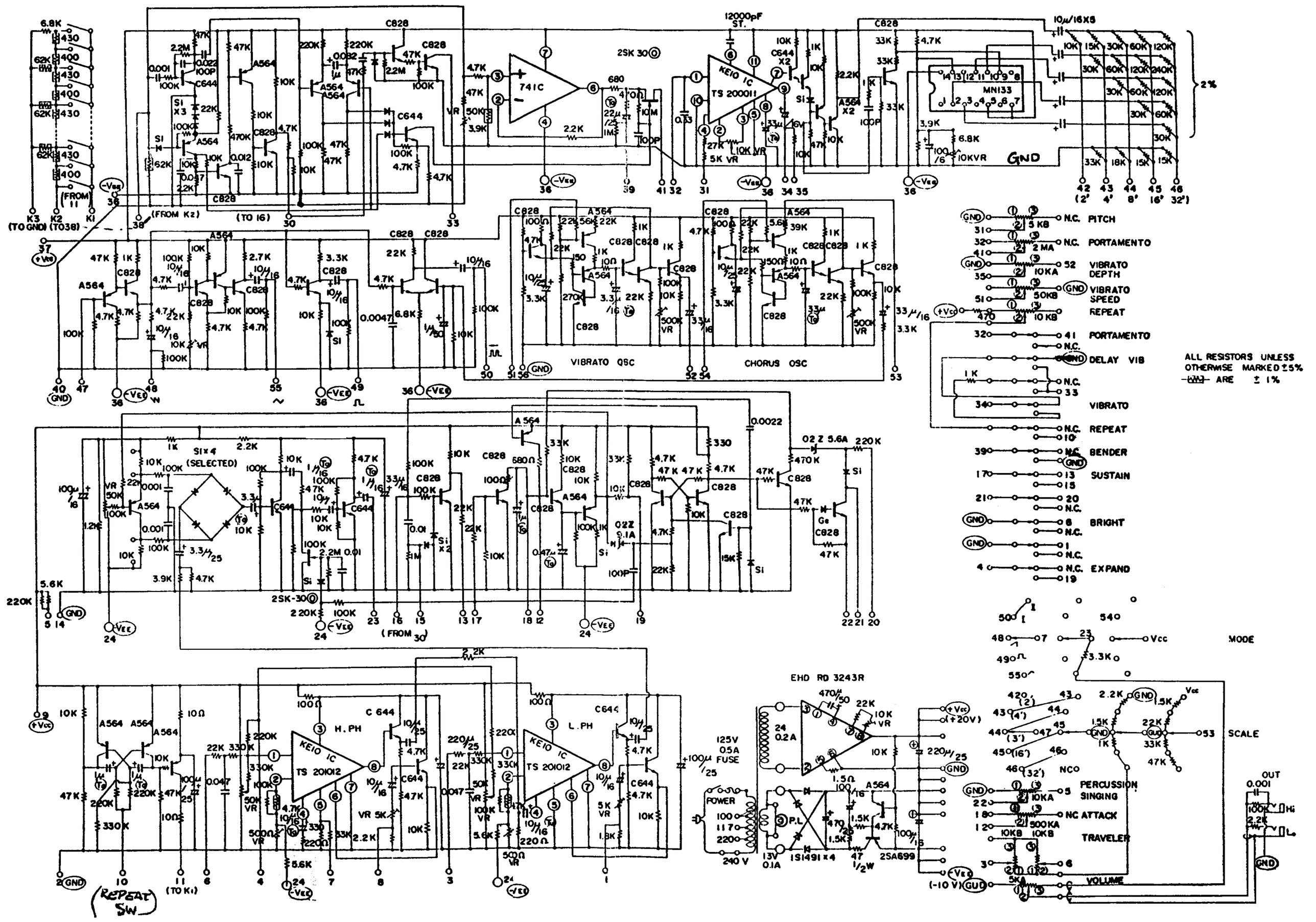
741C
KEIO IC TS 200011
KEIO IC TS 201012
MN133
VIBRATO OSC
CHORUS OSC
PITCH
PORTAMENTO
VIBRATO DEPTH
VIBRATO SPEED
REPEAT
DELAY VIB
VIBRATO
BENDER
SUSTAIN
BRIGHT
EXPAND
MODE
SCALE
NCO
PERCUSSION SINGING
NC ATTACK
TRAVELER
VOLUME
POWER
125V 0.5A FUSE
ALL RESISTORS UNLESS OTHERWISE MARKED ±5%
ARE ± 1%

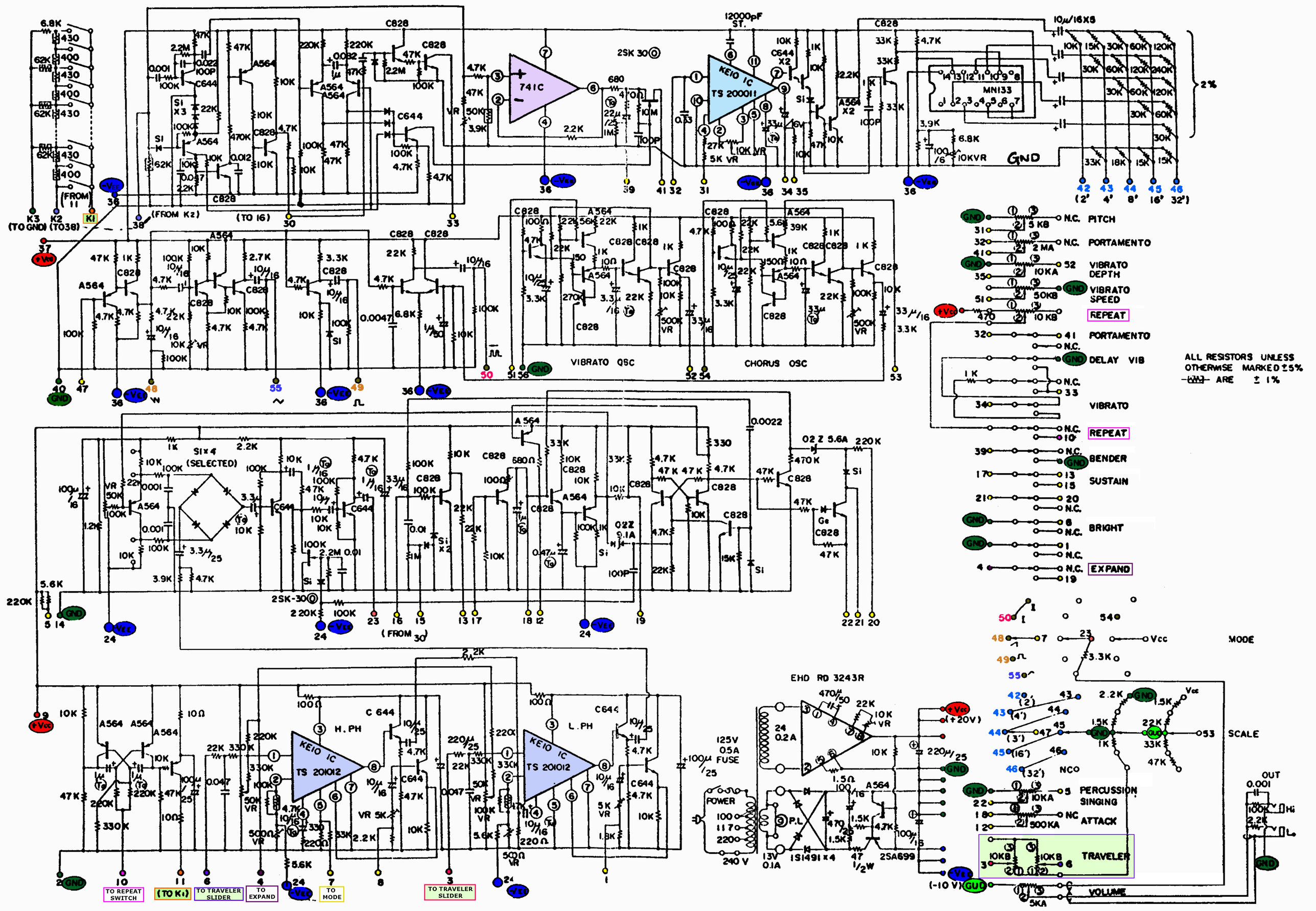
741C
KEIO IC TS 200011
KEIO IC TS 201012
MN133
VIBRATO OSC
CHORUS OSC
PITCH
PORTAMENTO
VIBRATO DEPTH
VIBRATO SPEED
REPEAT
DELAY VIB
VIBRATO
BENDER
SUSTAIN
BRIGHT
EXPAND
MODE
SCALE
NCO
PERCUSSION
SINGING
ATTACK
TRAVELER
VOLUME
POWER
125V 0.5A FUSE
EHD RD 3243R
TO REPEAT SWITCH
TO TRAVELER SLIDER
TO EXPAND
TO MODE
ALL RESISTORS UNLESS OTHERWISE MARKED ±5% ARE ±1%